國立臺灣科技大學
NATIONAL TAIWAN UNIVERSITY OF SCIENCE AND TECHNOLOGY

Cable Insertion Robot

Adolfo Nicolas Miranda Ferreira, Juan Sebastian Bogado Velazquez, Saul Ferreira Roig Ocampos

Ph.D. Shu-Hao Liang

2026

Autonomous Robotic Connector Insertion

This work presents a unified robotic framework that integrates contact-based surface and port mapping with autonomous connector insertion using visual estimation of spring compression force.

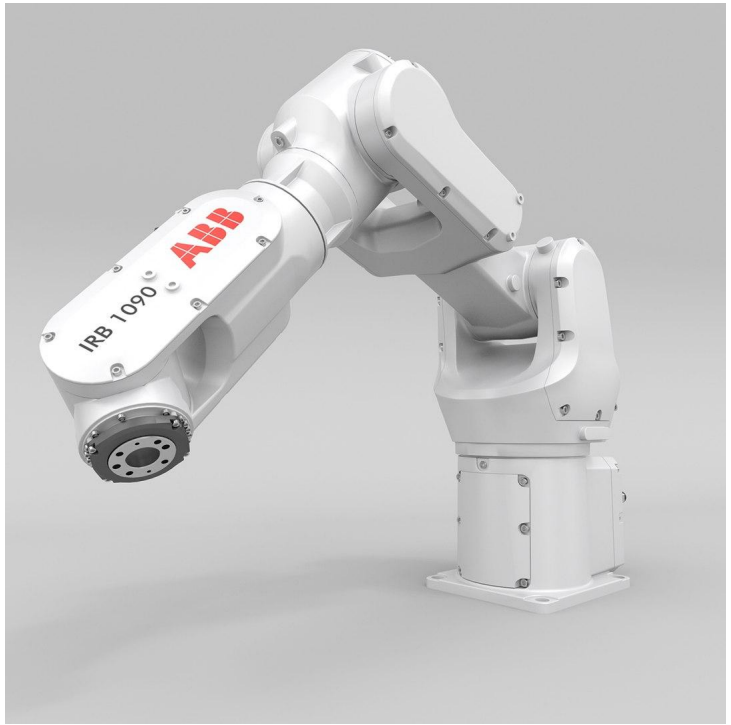

Embedded Force Analysis Tool

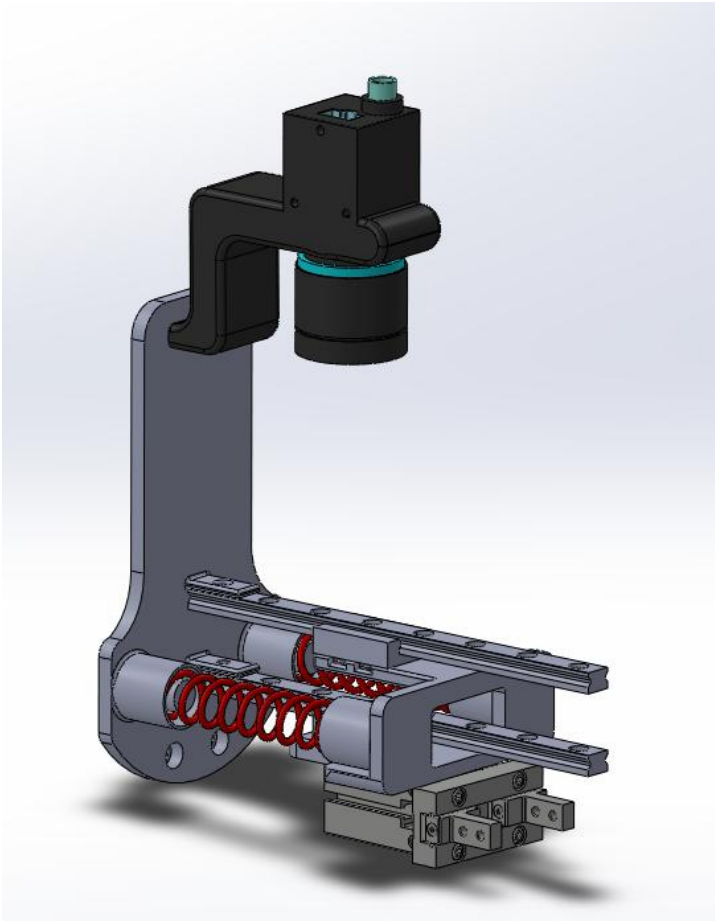

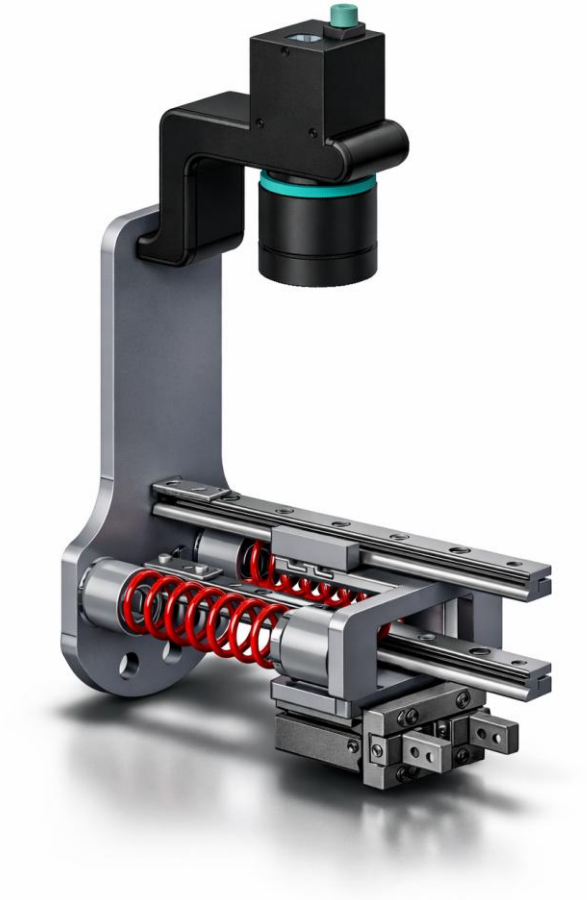

This integrated sensing tool operates as a Vision-Based Indirect Force Sensor through a passive compliance mechanism; it consists of a pneumatic gripper and clamp assembly mounted on linear sliders that allow for one-dimensional axial movement against a calibrated spring set..

Real-Time Centroid Mapping with ABB Robot and Python

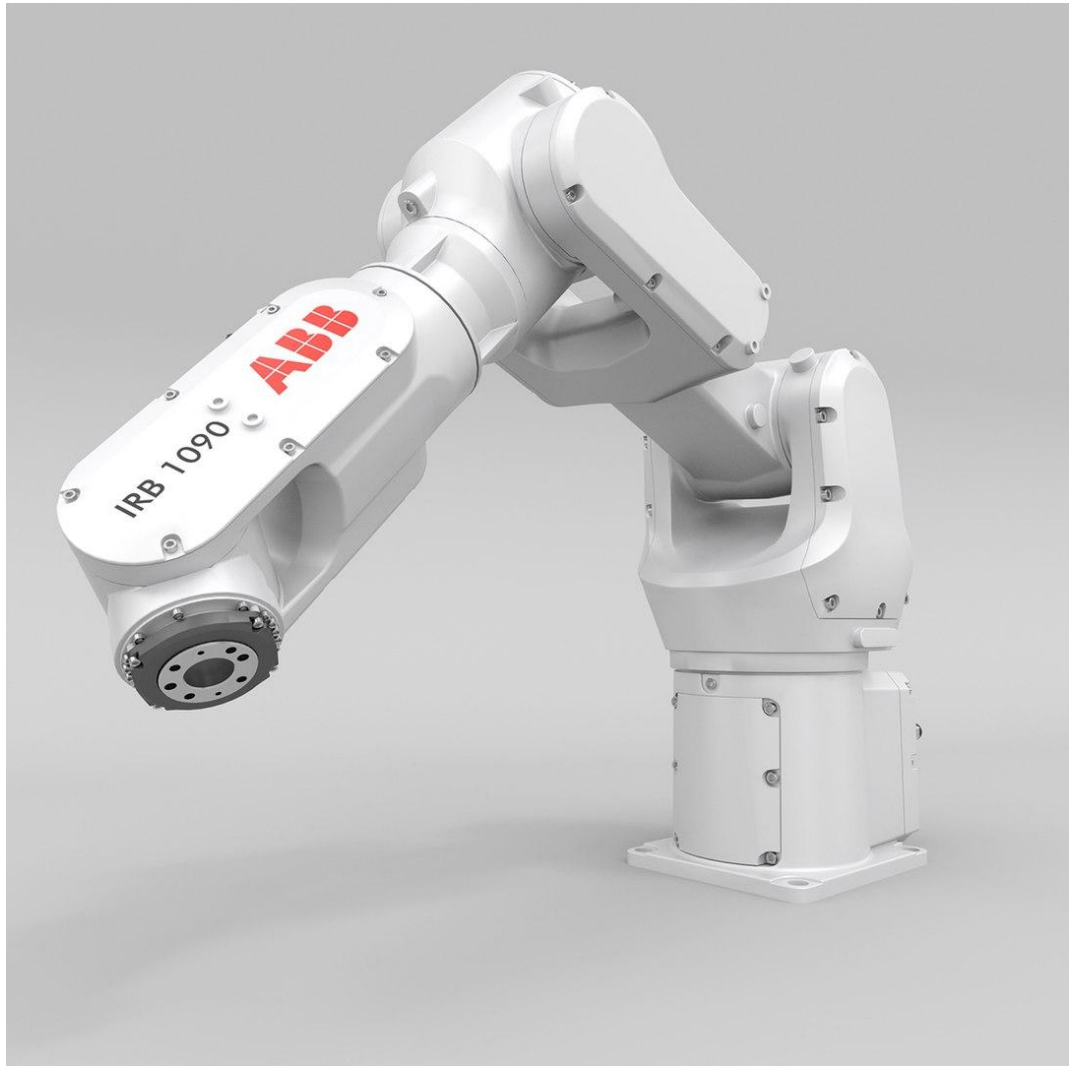

An ABB IRB 1090 six-axis industrial robot.
Detect contact conditions by monitoring the deformation of a spring element.
Binary matrix construction representing the surface structure of the connector panel.
Robot interconnection.

Real-Time Centroid Mapping with ABB Robot and Python

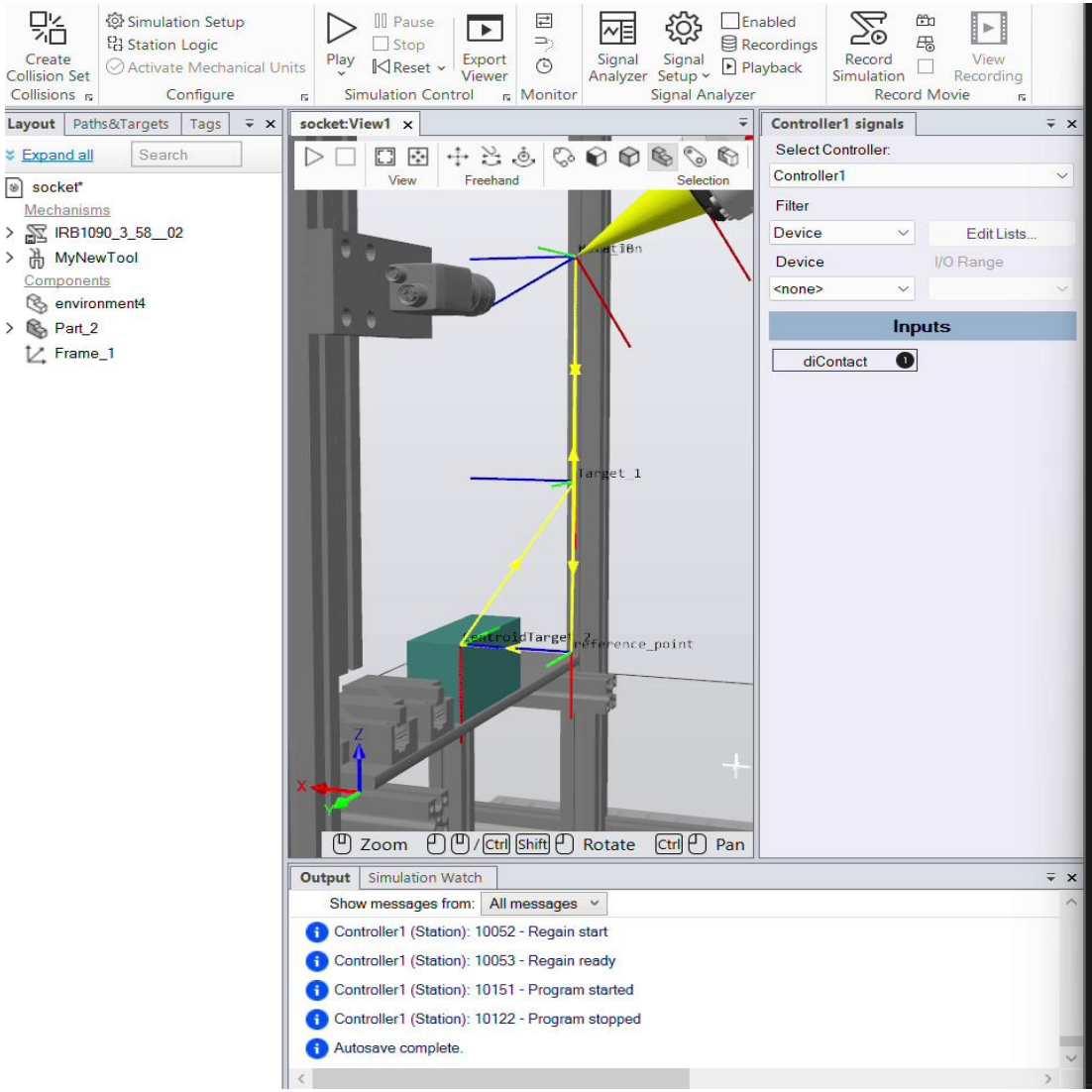

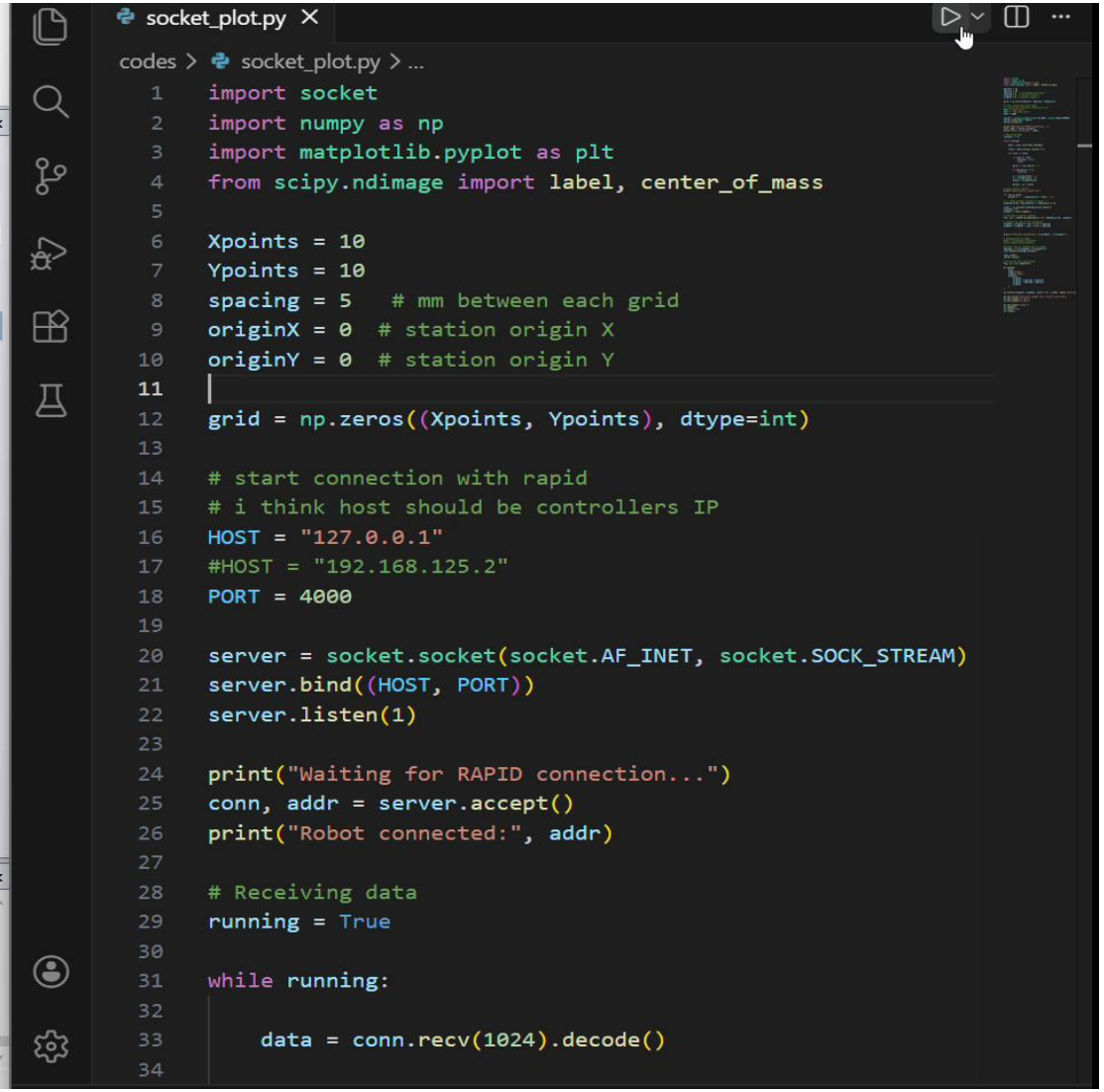

Real-Time Spring Deformation Sensing with Vision

Spring deformation measurement with a Cognex 8100 camera
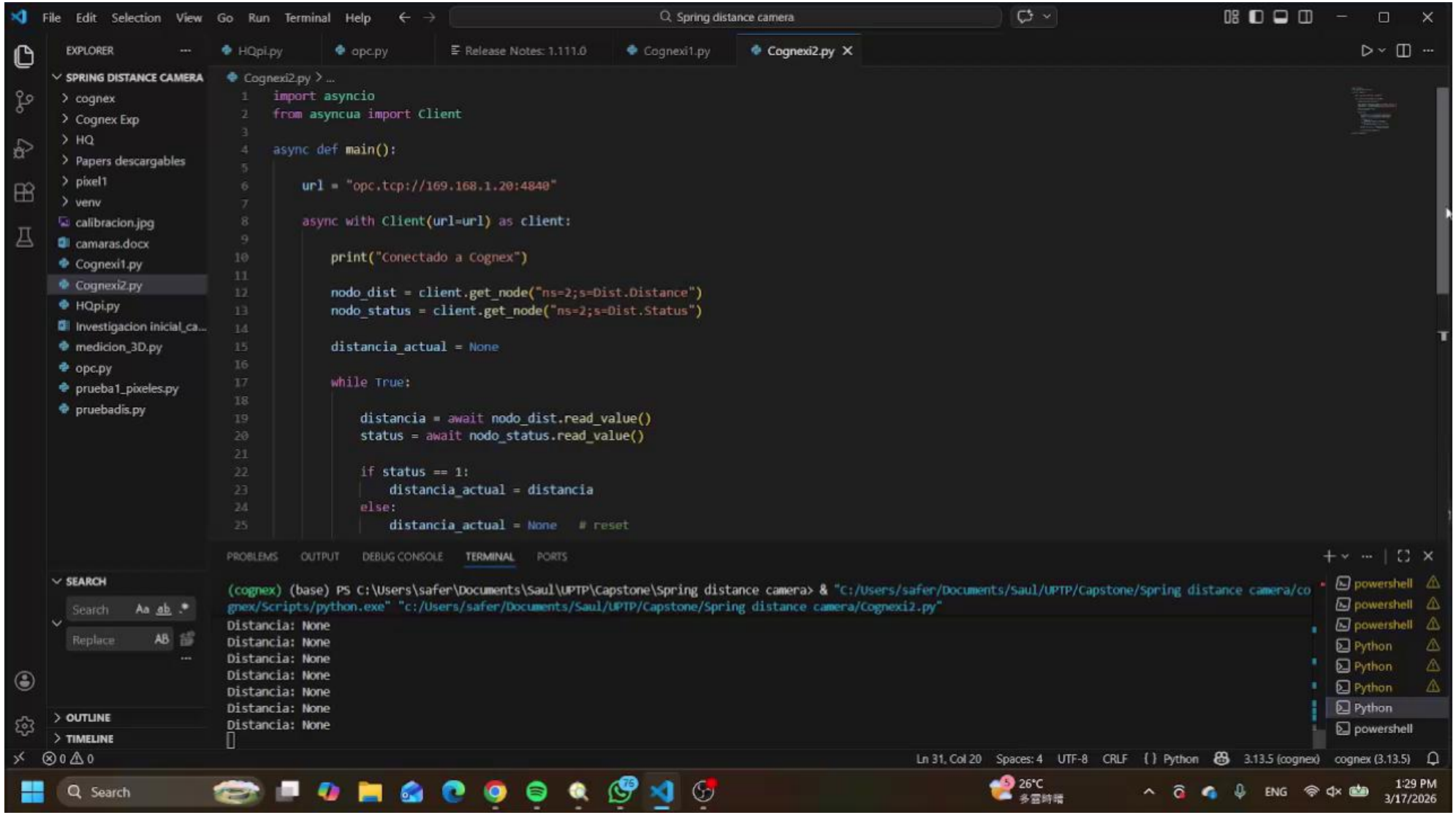
Real-Time Spring Deformation Sensing with Vision